CLIFF

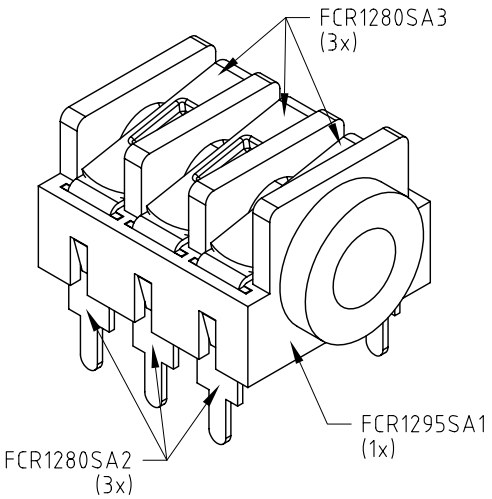

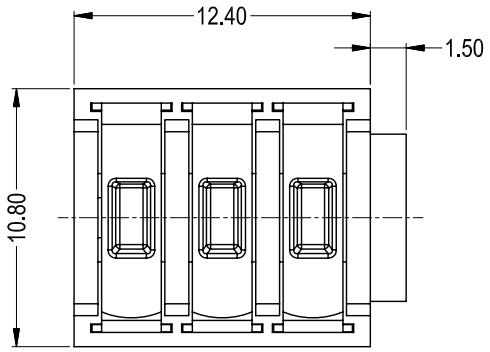

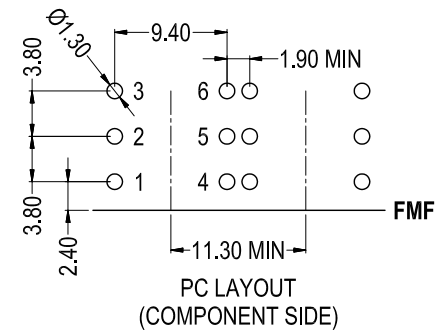

ISS.	AMEND	DATE
1	ISSUED	04/05/11
2	SUB P/N ADDED	09/05/11
3	FCR1295SA1 WAS FCR1280SA1	06/09/11

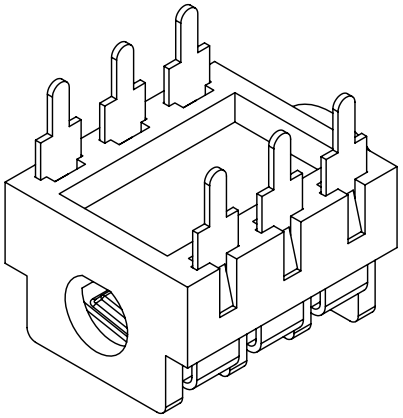

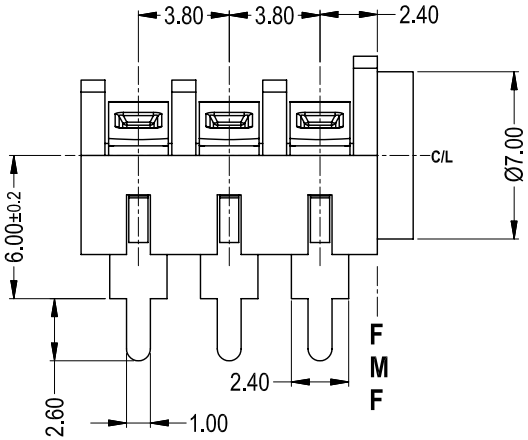

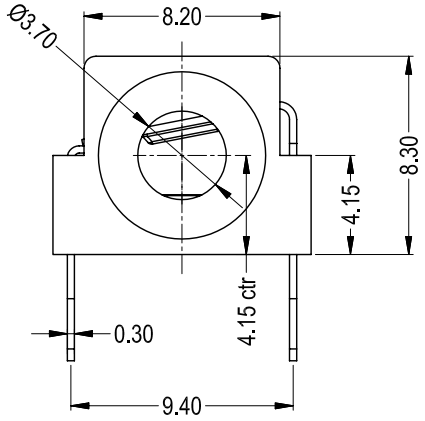

SCHEMATIC

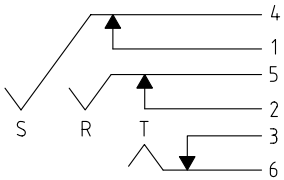

SWITCH CONTACTS OPEN WHEN PLUG IS INSERTED, CLOSE WHEN PLUG IS WITHDRAWN.

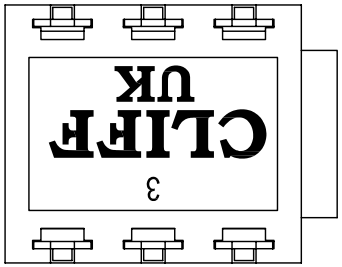

SPECIFICATIONS

- WITHSTAND VOLTAGE: 2000V DC min
- MAXIMUM CURRENT: 5A
- TEMPERATURE RANGE: -10°C TO +70°C
- LIFE (MINIMUM): 5,000+ OPERATIONS
- CONTACT RESISTANCE <50mΩ

RoHS COMPLIANT

TOLERANCE
NO DEC. PLACE ±0.50
1 DEC. PLACE ±0.20
2 DEC. PLACE ±0.10
HOLE Ø ±0.10
ANGLES ±1/2°
UNLESS OTHERWISE STATED

Cliff Electronic Components Ltd.
76 Holmethorpe Avenue, Holmethorpe Industrial Estate,
Redhill, Surrey, RH1 2PF, England, UK
Tel: 01737-771375 Fax: 01737-766012 Website: www.cliffuk.co.uk

THE CONTENTS OF THIS DOCUMENT MUST NOT BE COPIED OR DISCLOSED TO A 3rd PARTY WITHOUT WRITTEN PERMISSION OF CLIFF UK. © 2010

DIMENSIONS IN MILLIMETERS UNLESS OTHERWISE STATED. WORK TO DIMENSIONS. REMOVE ALL BURRS. IF IN DOUBT ASK.

3rd ANGLE PROJECTION:

DO NOT SCALE

MATERIAL: PBT - COPPER ALLOY / TIN PLATED

FINISH: AS MOULDED - CLEAN

DRAWN: T.J.O.

APPROVED: D.P.J.

TITLE: S9/BBB STEREO MINIJACK 6mm PCB

DRWG. No. FCR1295

FORM: A4DRWGH